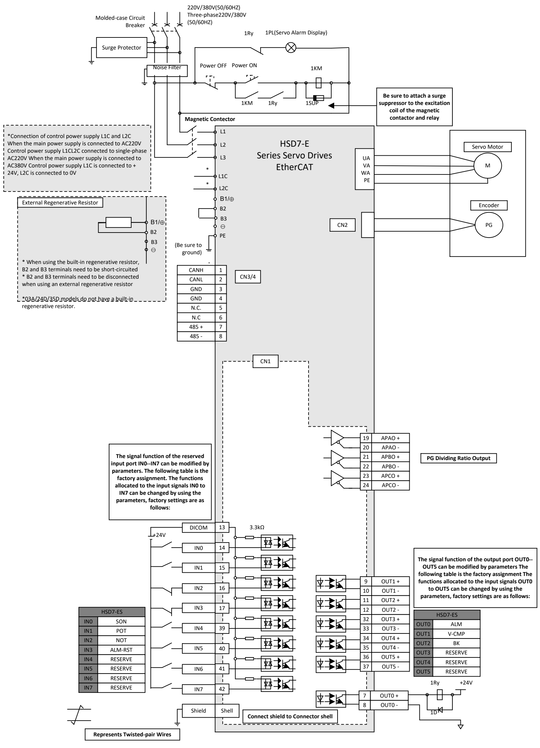
Molded-case Circuit Breaker
220V/380V(50/60HZ)
Three-phase220V/380V (50/60HZ)
Surge Protector
Noise Filter
18y
1PL(Servo Alarm Display)
Power OFF
Power ON
1KM
1KM
18y
15UP
Be sure to attach a surge suppressor to the excitation coil of the magnetic contactor and relay
Magnetic Contector
*Connection of control power supply L1C and L2C
When the main power supply is connected to AC220V Control power supply L1CL2C connected to single-phase AC220V When the main power supply is connected to AC380V Control power supply L1C is connected to + 24V, L2C is connected to 0V
HSD7-E
Series Servo Drives
EtherCAT
Servo Motor
M
Encoder
PG
UA
VA
WA
PE
CN2
L1
L2
L3
L1C
L2C
B1/⏚
B2
B3
(Be sure to ground)
PE
External Regenerative Resistor
B1/⏚
B2
B3
* When using the built-in regenerative resistor, B2 and B3 terminals need to be short-circuited
* B2 and B3 terminals need to be disconnected when using an external regenerative resistor
*30A/50/100 models do not have a built-in regenerative resistor.
CANH 1
CANL 2
GND 3
GND 4
N.C. 5
N.C 6
485 + 7
485 - 8
CN3/4
CN1
19 APAO +
20 APAO -
21 APBO +
22 APBO -
23 APCO +
24 APCO -
PG Dividing Ratio Output
The signal function of the reserved input port IN0–IN7 can be modified by parameters. The following table is the factory assignment. The functions allocated to the input signals IN0 to IN7 can be changed by using the parameters, factory settings are as follows:
DICOM 13
+24V
3.3KΩ
IN0 14
IN1 15
IN2 16
IN3 17
IN4 39
IN5 40
IN6 41
IN7 42
HSD7-E5
IN0 SON
IN1 POT
IN2 NOT
IN3 ALM-RST
IN4 RESERVE
IN5 RESERVE
IN6 RESERVE
IN7 RESERVE
9 OUT1 +
10 OUT1 -
11 OUT2 +
12 OUT2 -
32 OUT3 +
33 OUT3 -
34 OUT4 +
35 OUT4 -
36 OUT5 +
37 OUT5 -
7 OUT0 +
8 OUT0 -
The signal function of the output port OUT0–OUT5 can be modified by parameters The following table is the factory assignment The functions allocated to the input signals OUT0 to OUT5 can be changed by using the parameters, factory settings are as follows:
HSD7-E5
OUT0 ALM
OUT1 V-CMP
OUT2 BK
OUT3 RESERVE
OUT4 RESERVE
OUT5 RESERVE
18y
+24V
10
Shield
Shell
Connect shield to Connector shell
Represents Twisted-pair Wires

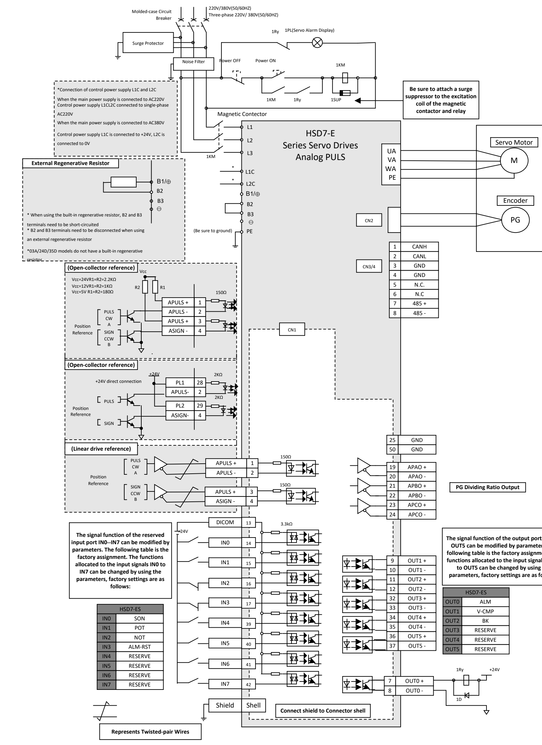
Molded-case Circuit Breaker
220V/380V(50/60HZ)
Three-phase 220V/ 380V(50/60HZ)
Surge Protector
Noise Filter
18y
1PL(Servo Alarm Display)
Power OFF
Power ON
1KM
1KM
18y
15UP
Be sure to attach a surge suppressor to the excitation coil of the magnetic contactor and relay
Magnetic Contector
*Connection of control power supply L1C and L2C
When the main power supply is connected to AC220V Control power supply L1CL2C connected to single-phase AC220V
When the main power supply is connected to AC380V
Control power supply L1C is connected to +24V, L2C is connected to-0V
HSD7-E
Series Servo Drives
Analog PULS
Servo Motor
M
Encoder
PG
UA
VA
WA
PE
CN2
L1
L2
L3
L1C
L2C
B1/⏚
B2
B3
(Be sure to ground)
PE
External Regenerative Resistor
B1/⏚
B2
B3
* When using the built-in regenerative resistor, B2 and B3 terminals need to be short-circuited
* B2 and B3 terminals need to be disconnected when using an external regenerative resistor
*30A/50/100 models do not have a built-in regenerative resistor.
CN3/4
1 CANH
2 CANL
3 GND
4 GND
5 N.C.
6 N.C
7 485 +
8 485 -
(Open-collector reference)
Vcc=24V(+R2)=2.2KΩ
Vcc=12V(R1+R2)=1KΩ
Vcc=5V R1=R2=180Ω
Position Reference
PULS CW A
SIGN CCW B
APULS + 1
APULS - 2
APULS + 3
ASIGN - 4
150Ω
CN1
(Open-collector reference)
+24V direct connection
PL1 28
APULS- 2
PL2 29
ASIGN- 4
2KΩ
(Linear drive reference)
APULS + 1
APULS - 2
APULS + 3
ASIGN - 4
25 GND
50 GND
19 APAO +
20 APAO -
21 APBO +
22 APBO -
23 APCO +
24 APCO -
PG Dividing Ratio Output
The signal function of the reserved input port IN0–IN7 can be modified by parameters. The following table is the factory assignment. The functions allocated to the input signals IN0 to IN7 can be changed by using the parameters, factory settings are as follows:
DICOM 13
+24V
3.3KΩ
IN0 14
IN1 15
IN2 16
IN3 17
IN4 39
IN5 40
IN6 41
IN7 42
HSD7-E5
IN0 SON
IN1 POT
IN2 NOT
IN3 ALM-RST
IN4 RESERVE
IN5 RESERVE
IN6 RESERVE
IN7 RESERVE
9 OUT1 +
10 OUT1 -
11 OUT2 +
12 OUT2 -
32 OUT3 +
33 OUT3 -
34 OUT4 +
35 OUT4 -
36 OUT5 +
37 OUT5 -
7 OUT0 +
8 OUT0 -
The signal function of the output port OUT0–OUT5 can be modified by parameters The following table is the factory assignment The functions allocated to the input signals OUT0 to OUT5 can be changed by using the parameters, factory settings are as follows:
HSD7-E5
OUT0 ALM
OUT1 V-CMP
OUT2 BK
OUT3 RESERVE
OUT4 RESERVE
OUT5 RESERVE
18y
+24V
10
Shield
Shell
Connect shield to Connector shell
Represents Twisted-pair Wires